EXXEL PACIFIC
GENERAL CONTRACTORS

Request For Information - 001

The Cora Apartments (19 W Harrison)

Job #201602 DATE: 03/15/2016

To:	**Peter Neilsen**	**From**	**Jola Bielecki**
	VIA Architecture 1809 7th Avenue, Suite 800 Seattle, WA 98101		The Cora Apartments (19 W Harrison) 19 W Harrison Seattle, WA 98109
Phone:	206-995-8872	**Phone:**	206-453-1005 ext. 374
Fax:		**Fax:**	360-671-7616
Email:	pneilsen@via-architecture.com	**Email:**	JolaB@exxelpacific.com
CC:	SaschaE@cplinc.com		

Subject:	**Foundation Wall Drainage Layout**	**Status:**	**Open**
Drawing #:		**Spec Sect #:**	
Addendum:		**Submittal #:**	

Potential Schedule &/or Cost Impacts:

Schedule Impact (days):
Cost Impact:

Information Requested: **Date Required: 03/22/2016**

Please provide the foundation wall drainage layout, as requested in e-mail from Plumbing Subcontractor, Mike Donelson of OneWay in the e-mail, dated 3/15/2016. The layout is needed for their preparation of the underground plumbing shop drawings.

Suggestion:

Requesting Firm: Exxel Pacific, Inc.

Submitted By: *Jola Bielecki*

Response:

Date	Response
04/05/16	A new Foundation Drainage Plan, Sheet C0201 has been created - see attached, and to the best of our knowledge appears to meet Geotechnical Recommendations by Pan Geo Inc. per Geotechnical Report dated July 2014.

Jola Bielecki

From: Mike Donelson <miked@owpllc.net>
Sent: Tuesday, March 15, 2016 10:17 AM
To: Victor Vo; Jola Bielecki
Cc: Brett Mortimore; Richard Donelson
Subject: Cora foundation drainage design

Follow Up Flag: Follow up
Flag Status: Flagged

Victor,
We are still in need of a foundation wall drainage layout/design drawing from the civil engineer for the Cora project. We need this design as soon as possible to be able to complete our underground design drawings, including concrete basin depths.

Mike Donelson
425-968-8314 ext-115

19 West Harrison

19 West Harrison
Seattle, Washington

Vicinity Map

1"=200'

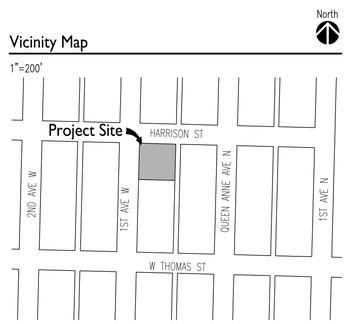

Legal Description

LOTS 11 AND 12, BLOCK 21, D. T. DENNY'S NORTH SEATTLE ADDITION AKA NORTH SEATTLE ACCORDING TO PLAY RECORDED IN VOLUME 1 OF PLATS, PAGE 41, IN KING COUNTY, WASHINGTON

Vertical Datum

NAVD 1988

VERTICAL BENCHMARKS:

SOURCE: CITY OF SEATTLE
ID#: 3773-3409
DESCRIPTION: 2" BRASS DISC STAMPED "3773 3409"
LOCATION: INT OF CONC WALKS, SE QUADRANT OF WESTERN AVE & 1ST AVE W
ELEVATION: 48.90'

SOURCE: CITY OF SEATTLE
ID#: 3809-6404
DESCRIPTION: 2" BRASS DISC STAMPED "3809-6404"
LOCATION: PC CONC WALK, SW QUADRANT OF 2ND AVE W & W REPUBLICAN ST
ELEVATION: 99.65'

Horizontal Datum

NAD83(2011)

HORIZONTAL BENCHMARKS:

OWNER: CITY OF SEATTLE
DESCRIPTION: 3/8" BRASS IN IN CONC, DN 0.6'
LOCATION: 5'N OF INTERSECTION OF W THOMAS ST & 1ST AVE
NORTHING: 230231.56
EASTING: 1264423.05

OWNER: CITY OF SEATTLE
DESCRIPTION: 3/8" BRASS IN IN CONC, DN 0.4'
LOCATION: INTERSECTION OF W THOMAS ST & QUEEN ANNE AVE N
NORTHING: 230218.50
EASTING: 1264745.03

Sheet Index

C0000 COVER SHEET AND NOTES
C0100 DEMOLITION PLAN
C0200 TESC AND EXCAVATION PLAN
C0201 FOUNDATION DRAINAGE PLAN 3
C0210 TESC DETAILS
C0220 EXCAVATION SECTIONS
C0300 CIVIL SITE PLAN
C0310 CIVIL SITE DETAILS

Owner

19 W HARRISON LLC
737 OLIVE WAY #3901
SEATTLE, WA 98101
PHONE: 206 728-1912 CONTACT: PATRICK CAHILL

Architect

VIA ARCHITECTURE
1809 7TH AVE, SUITE 800
SEATTLE, WA 98101
PHONE: 206 812-2061 CONTACT: JIM BODOIA

Engineer

COUGHLIN PORTER LUNDEEN
801 SECOND AVE, SUITE 900
SEATTLE, WA 98104
(206) 343-0460 CONTACT: ALAN JACOBSON, PE

Surveyor

BUSH ROED & HITCHINGS
2009 MINOR AVENUE EAST
SEATTLE, WA 98102
PHONE: 206 323-4144 CONTACT: OLIVER ROBAR

CONSTRUCTION EROSION CONTROL MEASURES MUST BE IN PLACE AND APPROVED BY DPD PRIOR TO ANY EARTH DISTURBANCE. CALL 206-684-8860 TO SCHEDULE AN INSPECTION APPOINTMENT FOR THIS ITEM.

A PRE-CONSTRUCTION MEETING IS REQUIRED BETWEEN THE OWNER'S REPRESENTATIVES AND DPD SITE INSPECTOR CONTACT (206) 684-8860 TO ARRANGE A MEETING (GEOTECHNICAL, SPECIAL INSPECTOR, GENERAL CONTRACTOR, AND EXCAVATION CONTRACTOR)

GRADING MUST BE STABILIZED BY OCTOBER 31ST. NO EXCAVATION SHALL BE PERFORMED BETWEEN OCTOBER 31ST AND APRIL 1ST. IF EXCAVATION AND GRADING IS TO OCCUR BETWEEN OCTOBER 31ST AND APRIL 1ST, A GRADING SEASON EXTENSION APPLICATION MUST BE APPLIED FOR WITH DPD BY THE OWNER.

VIA

VIA Architecture | www.via-architecture.com
1809 7th Avenue Ste. 800 Seattle WA 98101
tel 206 284 5624 fax 206 624 5624

CONSULTANT
COUGHLINPORTERLUNDEEN
A CONSULTING STRUCTURAL AND CIVIL ENGINEERING CORPORATION
801 SECOND AVENUE - SUITE 900 P: 206/343-0460
SEATTLE, WA 98104 F: 206/343-5691

PROJECT
19 W Harrison

Seattle, WA 98119
76114

OWNER
19 W Harrison LLC

PROFESSIONAL SEAL
JERALD A. JACOBSON
STATE OF WASHINGTON
43667
REGISTERED PROFESSIONAL ENGINEER
3/16/2016

DESIGN TEAM
JAJ
PRINCIPAL
JAJ
PROJECT MANAGER
PROJECT ARCHITECT
DJD
DRAWN BY
SSE, JAJ
CHECKED BY

DRAWING SET DESCRIPTION
For Construction

REVISIONS

No.	DATE	DESCRIPTION
1	04/01/2015	MUP CORRECTIONS - DRAINAGE
2	08/21/2015	BUILDING PERMIT CORRECTIONS
3	04/05/2016	RFI-001 FOUNDATION DRAINAGE

SHEET TITLE
COVER SHEET

SHEET NUMBER
C0000

ISSUE DATE
01.08.2016

ALL RIGHTS RESERVED BY VIA ARCHITECTURE INCORPORATED. THIS DESIGN IS NOT TO BE USED OR REPRODUCED WITHOUT THE CONSENT OF VIA ARCHITECTURE INCORPORATED.

DPD STAMP

\\server6\civil_2014\P14AA-028\CAD\19W_COVER.dwg 2/18/2015 3:38 PM SSE

Not Used NTS 1

Not Used NTS 5

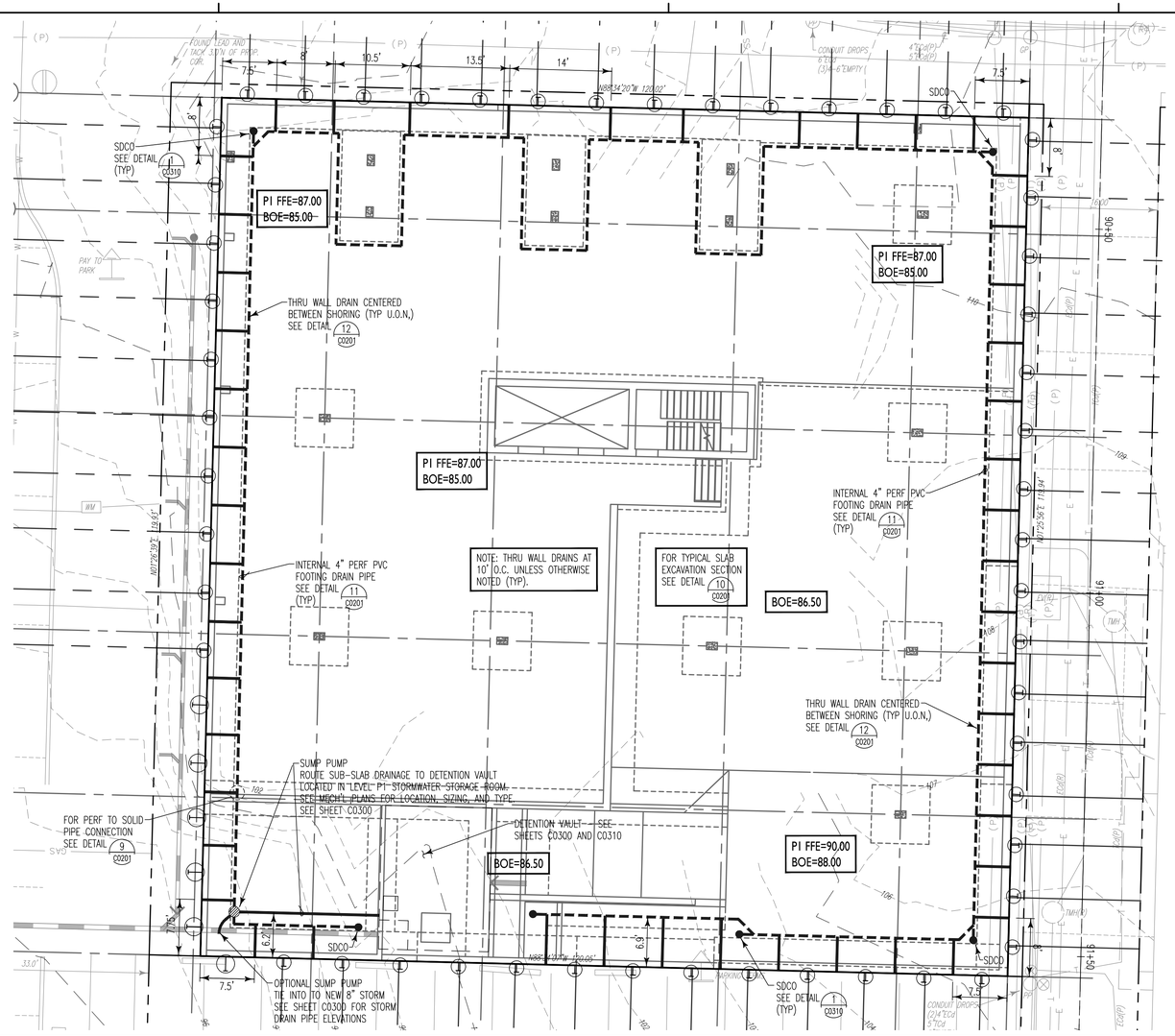

Foundation Drainage Plan NTS 8

Call before you Dig. 8-1-1 or 1-800-424-5555 UNDERGROUND SERVICE (USA)

0 5 10 20

SCALE 1"=10'

Legend

N 79°33'06" E – 46.81'	PROPERTY LINE
	LIMITS OF CONSTRUCTION
	SHORING
	4" INTERNAL FOOTING DRAIN
	4" PERFORATED PIPE
	CLEAN OUT

Foundation Drain Notes

1. SEE STRUCTURAL PLANS FOR FOOTING LOCATIONS AND DIMENSIONS. FOOTINGS SHOWN ON THIS PLAN ARE FOR REFERENCE ONLY. DO NOT DISTURB THE 1:1 BEARING PLAN OF FOOTING SUBGRADE. NOTIFY ENGINEER OF DISCREPANCIES OR CONFLICTS PRIOR TO CONSTRUCTION. COORDINATE INSTALLATION WITH THE GEO-TECHNICAL ENGINEER TO VERIFY ANTICIPATED GROUNDWATER FLOW RATES. ALL WORK WITHIN THE BUILDING FOOTPRINT SHALL CONFORM TO THE CURRENT UNIFORM PLUMBING CODE (UPC). A LICENSED PLUMBER SHALL OVERSEE ALL WORK IN ACCORDANCE WITH THE UPC. MATERIALS USED WITHIN THE BUILDING FOOTPRINT SHALL CONFORM TO THE UPC. THE CONTRACTOR IS RESPONSIBLE FOR OBTAINING APPROPRIATE PLUMBING PERMITS FROM THE CITY OF SEATTLE.
2. FLOW RATES ARE ANTICIPATED TO RANGE FROM ZERO TO 10 GPM. THE ACTUAL FLOW RATES FROM THE UNDERSLAB DRAINAGE SYSTEM SHALL BE RE-EVALUATED BY THE GEOTECHNICAL ENGINEER DURING CONSTRUCTION USING ACTUAL FLOWS OBSERVED DURING CONSTRUCTION.
3. ALL FOOTING DRAIN CLEAN-OUTS SHALL BE INSTALLED IN COMPLIANCE WITH THE UNIFORM PLUMBING CODE, INCLUDING MATERIAL, SIZE, LOCATION AND NUMBER OF CLEAN-OUTS.
4. ALL WORK WITHIN THE BUILDING FOOTPRINT SHALL CONFORM TO THE CURRENT UNIFORM PLUMBING CODE (UPC). A LICENSED PLUMBER SHALL OVERSEE ALL WORK IN ACCORDANCE WITH THE UPC. MATERIALS USED WITHIN THE BUILDING FOOTPRINT SHALL CONFORM TO THE UPC. THE CONTRACTOR IS RESPONSIBLE FOR OBTAINING APPROPRIATE PLUMBING PERMITS FROM THE CITY OF MERCER ISLAND.
5. PLUMBING CONTRACTOR SHALL COORDINATE ALL CLEANOUT LOCATIONS WITH ARCH'L PLANS AND OBTAIN APPROVAL FROM THE PROJECT ARCHITECT PRIOR TO INSTALLATION.

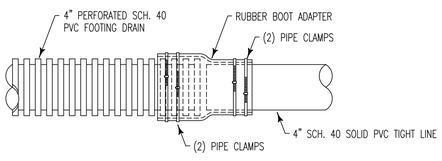

Dis-Similar Pipe Connection NTS 9

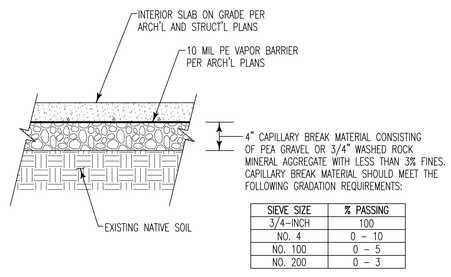

SIEVE SIZE	% PASSING
3/4-INCH	100
NO. 4	0 – 10
NO. 100	0 – 5
NO. 200	0 – 3

Building Slab-on-Grade Excavation Section NTS 10

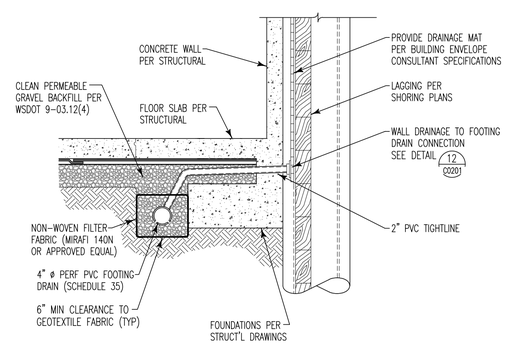

NOTE:
PROVIDE HYDRAULIC CONNECTION BETWEEN DRAIN MAT AND 2" TIGHTLINE USING MIRADRAIN QUICK DRAIN CONNECTION OR SIMILAR MANUFACTURER APPROVED CONNECTION.

Typical Internal Footing Drain at Shoring Wall NTS 11

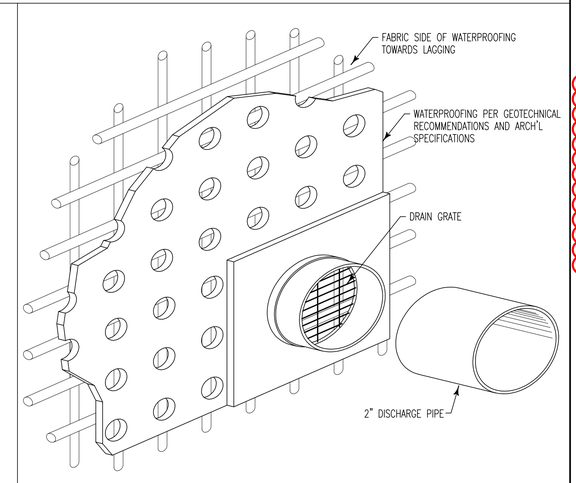

Wall Drainage to Footing Drain Connection NTS 12

VIA

VIA Architecture | www.via-architecture.com
1809 7th Avenue Ste. 800 Seattle WA 98101
tel 206 284 5624 fax 206 624 5624

CONSULTANT
COUGHLIN PORTER LUNDEEN
A CONSULTING STRUCTURAL AND CIVIL ENGINEERING CORPORATION
801 SECOND AVENUE - SUITE 900 SEATTLE, WA 98104
P: 206/343-0460 F: 206/343-5691

PROJECT
19 W Harrison
Seattle, WA 98119
76114

OWNER
19 W Harrison LLC

PROFESSIONAL SEAL
JERALD A. JACOBSEN, STATE OF WASHINGTON, 43667, REGISTERED PROFESSIONAL ENGINEER
4/5/2016

DESIGN TEAM
JAJ
PRINCIPAL
JAJ
PROJECT MANAGER
PROJECT ARCHITECT
DJD
DRAWN BY
SSE, JAJ
CHECKED BY

DRAWING SET DESCRIPTION
For Construction

REVISIONS

No.	DATE	DESCRIPTION
1	04/01/2015	MUP CORRECTIONS - DRAINAGE
2	08/21/2015	BUILDING PERMIT CORRECTIONS
3	04/05/2016	RFI-001 FOUNDATION DRAINAGE

SHEET TITLE
FOUNDATION DRAINAGE PLAN

SHEET NUMBER
C0201

ISSUE DATE
01.08.2016

ALL RIGHTS RESERVED BY VIA ARCHITECTURE INCORPORATED. THIS DESIGN IS NOT TO BE USED OR REPRODUCED WITHOUT THE CONSENT OF VIA ARCHITECTURE INCORPORATED.

DPD STAMP

\\server6\civil_2014\P1444-028\CAD\19W_DE.dwg 11/24/2014 10:52 AM SSE

Jola Bielecki

From: Siew Tan <stan@pangeoinc.com>
Sent: Tuesday, April 05, 2016 3:39 PM
To: Sascha Eastman; Jola Bielecki
Cc: Peter Neilsen; CoraTeam; John Whitlow; Scott Dinkelman
Subject: 14-158: 19 W - Cora Aptms. - RFI #001 - Foundation Wall Drainage Layout

Follow Up Flag: Follow up
Flag Status: Completed

Hi All,

It is acceptable to have one single perf pipe for the wall/footing drain. Especially considering the next door has a deeper basement.

Regards,
Siew

Siew L. Tan, P.E.

PanGEO, Inc.
3213 Eastlake Avenue East, Suite B
Seattle, WA 98102
Office: 206.262.0370
Cell: 206.406.8692
stan@pangeoinc.com

From: Sascha Eastman [mailto:SaschaE@cplinc.com]
Sent: Tuesday, April 05, 2016 2:38 PM
To: Jola Bielecki
Cc: Peter Neilsen; CoraTeam; John Whitlow; Scott Dinkelman; Siew Tan
Subject: RE: Cora Aptms. - RFI #001 - Foundation Wall Drainage Layout

Jola,

I agree that this is what is indicated in the Geotech report, but our design is similar to what we are doing for the project to the south at 1st and Thomas per coordination with another geotech on that project. Per the Pan Geo soils report, the borings were performed in the summer months and ground water levels were at ~20-ft below existing grade with some localized pockets at 7.5'-12'. During the winter months the groundwater level will be higher and could be almost half of the summer groundwater level or close to 10-ft below existing grade. The foundation will be deeper than 10-ft and close to 20-ft (maybe 18-ft at north end) in many areas, so that is why we show the double collector system with dedicated solid wall drain pipe and separate perf footin drain.

We would like Pan Geo to provide the final OK with the wall drainage being routed to a single 4" perforated drain pipe versus the double pipe system we show. If they are OK with it, then we will update our plan/details accordingly and re-issue as part of our response to the RFI. I have cc'ed Pan Geo on this email.

Please let me know.

Thanks,

Sascha Eastman, PE
LEED AP
COUGHLINPORTERLUNDEEN
STRUCTURAL CIVIL SEISMIC ENGINEERING
801 SECOND AVE / SUITE 900 / SEATTLE WA 98104
P: **206.343.0460** / cplinc.com

From: Jola Bielecki [mailto:JolaB@exxelpacific.com]
Sent: Tuesday, April 05, 2016 2:11 PM
To: Sascha Eastman
Cc: Peter Neilsen; CoraTeam; John Whitlow
Subject: RE: Cora Aptms. - RFI #001 - Foundation Wall Drainage Layout

Sascha,

In your response to **RFI 001 - Foundation Wall Drainage Layout**, you are showing a 4" PVC tightline in addition to 4" perforated PVC footing drain. Our plumbing subcontractor says that with so little ground water (per the soils report), most civil designs usually show 4" perforated PVC footing drain piping being used to pickup the foundation wall drainage weep lines (as shown on attached detail from civil drawings for another project). Is there any reason why the combined footing drain line wouldn't work for this project?

Thank you,

EXXEL PACIFIC
GENERAL CONTRACTORS
Jola Bielecki
Project Engineer
Cora Apartments
19 W. Harrison Street
Seattle, WA 98119
Phone: 206.453.1005 ext.374
Fax: 360.671.7616
Cell: 425.502.1573
www.exxelpacific.com

From: John Whitlow [mailto:jwhitlow@via-architecture.com]
Sent: Tuesday, March 29, 2016 10:44 AM
To: Jola Bielecki <JolaB@exxelpacific.com>
Cc: Peter Neilsen <pneilsen@via-architecture.com>; CoraTeam <CoraTeam@exxelpacific.com>
Subject: RE: Cora Aptms. - RFI #001 - Foundation Wall Drainage Layout

Jola,
Civil provided revised Cover Sheet and Drainage Plan sheet C0201. See attached.